ME 333 Introduction to Mechatronics
Circuits Review Solutions

R_{eq} for R_2 + R_3 in parallel: $\dfrac{1}{\frac{1}{R_2}+\frac{1}{R_3}} = \dfrac{R_2 R_3}{R_2+R_3}$

1. KCL: $I_1 = I_2 + I_3$

KVL: $V - I_1 R_1 - I_2 R_2 = 0$

$V - I_1 R_1 - I_3 R_3 = 0$

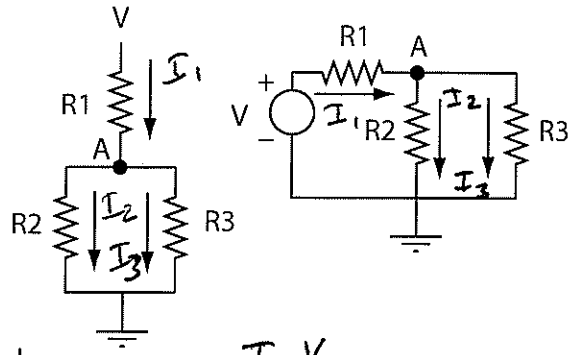

Solve: $I_1 = \dfrac{V(R_2+R_3)}{\underbrace{R_1R_2+R_1R_3+R_2R_3}_{R^*}}$

$I_2 = V\dfrac{R_3}{R^*}$

$I_3 = V\dfrac{R_2}{R^*}$

$V_A = V - I_1 R_1$

Power by source: $I_1 V$

Power dissipated by R_2: $I_2 V_{R_2} = I_2^2 R_2$

2.

At $t=0$, capacitor acts like a short circuit.
At $t=\infty$, acts like an open circuit.

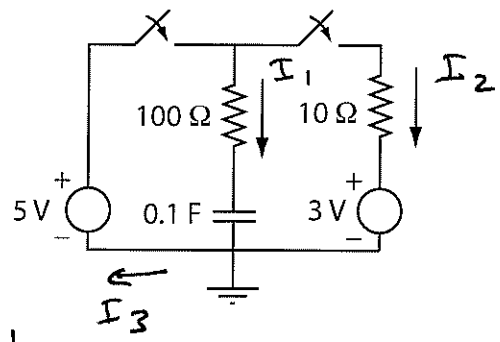

$t=0$:

KCL: $I_1 + I_2 = I_3$

KVL: $5 - 100 I_1 = 0$ $\quad I_1 = 0.05\,A$

$5 - 10 I_2 - 3 = 0$ $\quad I_2 = 0.2\,A$

$\dfrac{dV_c}{dt} = \dfrac{I_1}{C} = 0.5\ V/s$

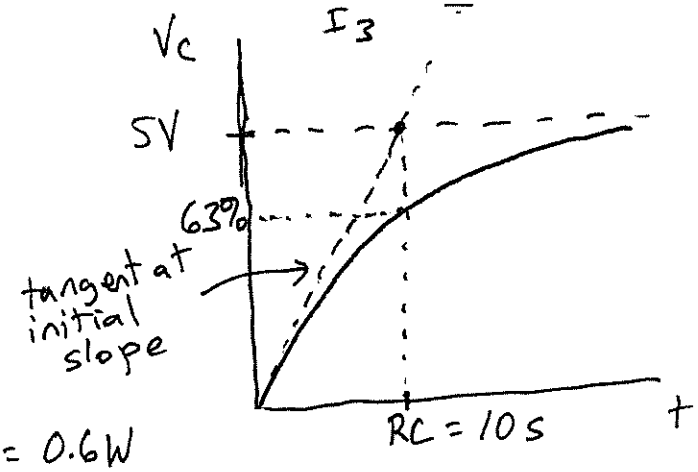

At steady state, $I_1 = 0$, $V_c = 5V$.

3V battery charged with power $3V(I_2) = 0.6W$

5V battery discharged, $P = 5V(I_2) = 1W$

Energy in capacitor $= \frac{1}{2} C V_c^2 = 1.25\,J$

3.

Voltage test: put leads at B and C

Current test: put leads at C and D and cut the circuit between C and D, so current flows through multimeter.

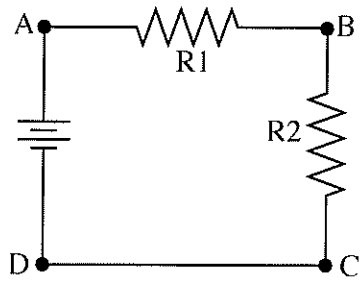

4. Approximately plot the current through the diode as a function of the voltage across the diode.

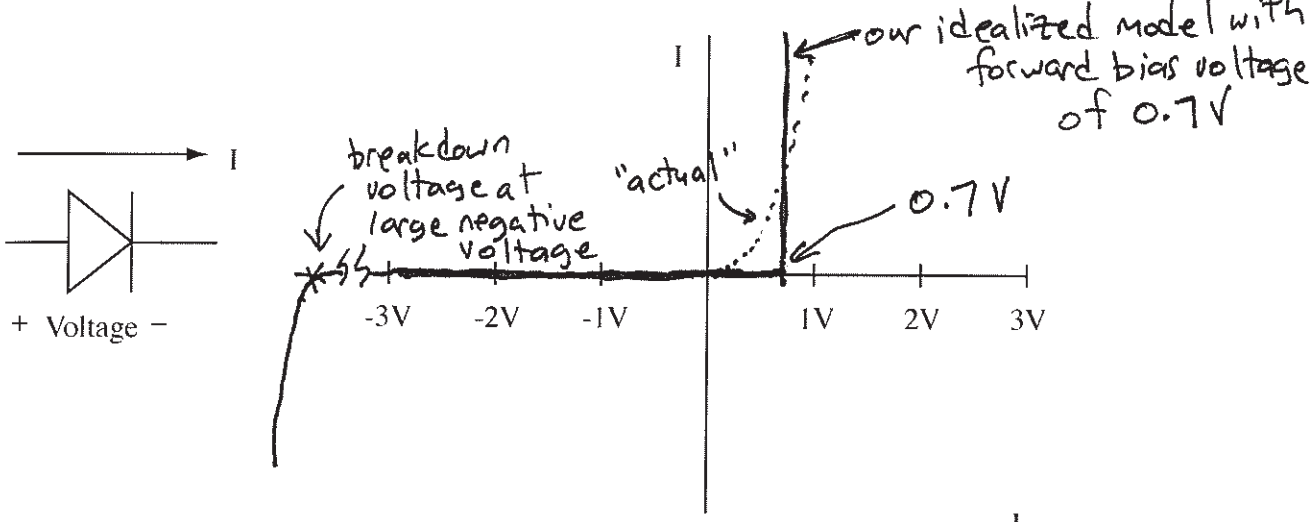

5. KCL: $I = I_1 + I_2$

KVL: $10 - \frac{dI_1}{dt} - 50 I_1 = 0$

$10 + V_D = 0$

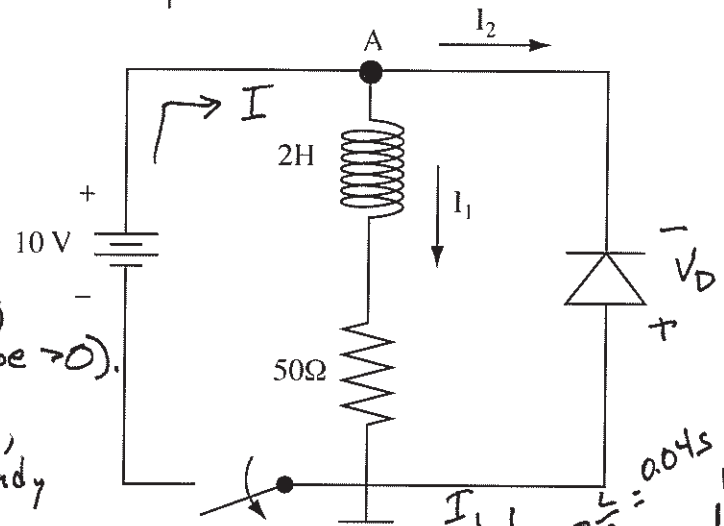

V_D is 0.7 V if $I_2 < 0$, and anything less than 0.7 V if $I_2 = 0$. (I_2 cannot be > 0).

When the switch is closed for a long time, case analysis shows $I_2 = 0$. In steady state, inductor is a short circuit, so $I_1 = 10\text{ V}/50\ \Omega = 0.2\text{ A}$. Inductor energy $= \frac{1}{2} L I^2 = 0.04$ J.

When switch opens, $I \to 0$, I_1 is unchanged (inductor's current can't change instantly), so $I_2 = -I_1 = -0.2$ A. Diode is forward biased, so $V_A = -0.7$ V. So $V_L = -0.7\text{ V} - (0.2\text{ A})(50\ \Omega) = -10.7\text{ V} = L\, dI_1/dt$, so $dI_1/dt = -5.35$ A/s.

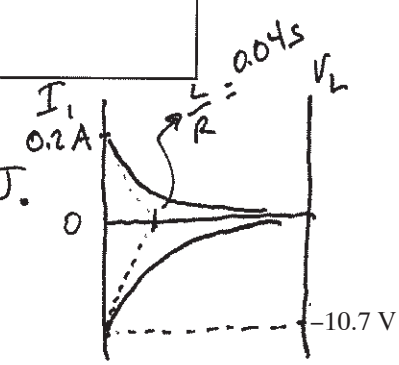

6. transistor off: $V_{in} < V_{BE}$

saturated when $V_E = V_S - V_{CEsat}$, or $V_B = V_S - V_{CEsat} + V_{BE}$.

So $I_E = \frac{V_S - V_{CEsat}}{R_2}$. At transition from linear to saturated, $I_B = I_E/\beta$, and $I_E = I_C + I_B$.

Solving, get $I_B = \frac{V_S - V_{CEsat}}{R_2(\beta+1)}$, and saturated if $V_{in} \geq V_S - V_{CEsat} + V_{BE} + I_B R_1$

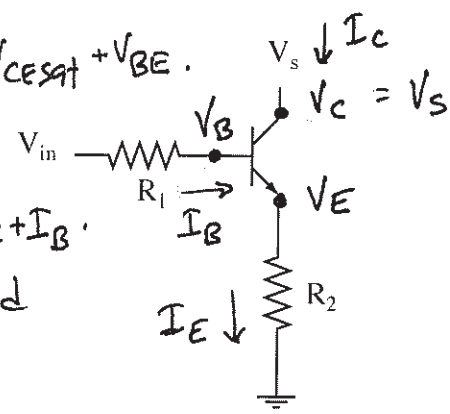

$V_B = 0.7V$. At saturation, $V_c = 0.2\,V$.

7. So $I_c = \dfrac{V_s - 0.2V}{R_2} = \beta I_B = \beta \dfrac{V_{in} - 0.7V}{R_1}$ at transition from linear to saturated.

$$\beta = \frac{R_1(V_s - 0.2V)}{R_2(V_{in} - 0.7V)}$$

β must be at least this large for saturation.

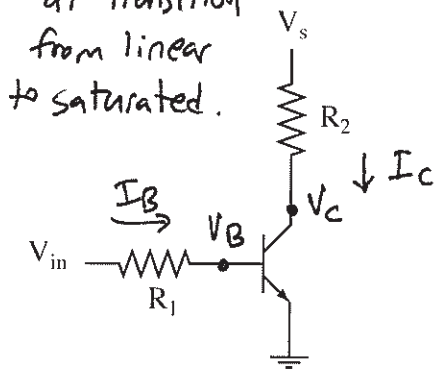

8. Steady state, L is a short circuit. Diode is reverse biased (no current).

$V_c = V_{CEsat}$, $I_c = \dfrac{V - V_{CEsat}}{R_2} = \beta I_B = \beta\left(\dfrac{V_{in} - V_{BE}}{R_1}\right)$

Solving for V_{in}, get $V_{in} \geq V_{BE} + \dfrac{(V - V_{CEsat})R_1}{\beta R_2}$ for saturation.

When V_{in} set to zero, transistor turns off, current must flow through diode as shown.

Current through inductor is still $I = (V - V_{CEsat})/R_2$, but begins to drop. $V_L - IR_2 - V_D = 0$.

Find V_L from that. Then use $V_L = L\dfrac{dI}{dt}$ to find $\dfrac{dI}{dt}$.

must be negative by the sign convention.

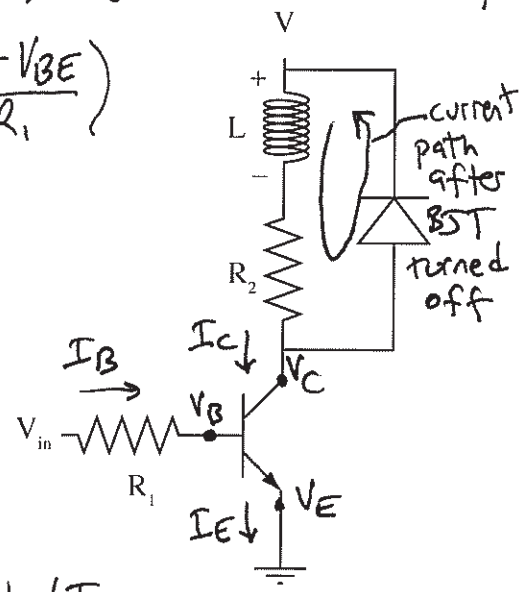

9. Current flows (transistor + LED on) for $V_{in} > 1.4V$ (voltage divider).

At saturation, $V_c = (10 - 0.7)V = 9.3V$, $V_E = 9.3 - 0.2 = 9.1V$,

so $I_E = \dfrac{9.1V}{100\,\Omega} = 0.091\,A = I_c + I_B = 101\,I_B$.

$I_B = 0.9\,mA$, $V_B = 9.1V + 0.7V = 9.8V$.

$V_{in} = \underbrace{(I_2 + I_B)}_{I_1} 1000\,\Omega + 9.8V$, & $I_2 = \dfrac{9.8V}{1000\,\Omega} = 9.8\,mA$.

Solving, $V_{in} = (10.7\,mA)1000\,\Omega + 9.8V = 20.5V$

$\boxed{V_{in} \geq 20.5V}$

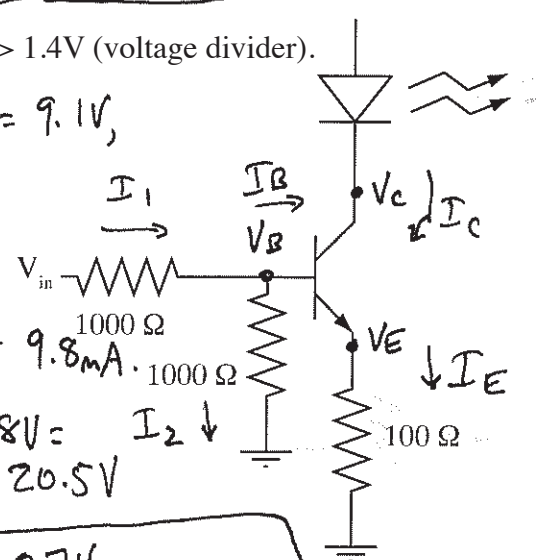

10.

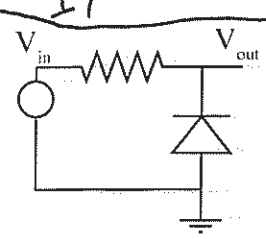

When current flows, $V_{out} = -0.7V$.

When current doesn't flow, $V_{out} = V_{in}$.

11. You can build a simple 3-bit digital-to-analog converter (DAC) using an op-amp as shown at right. The input voltages take values of either 0 or 1 V and represent a 3-bit binary number. At the output you want an analog representation of the 3-bit number, $V_{out} = -4V_2 - 2V_1 - V_0$. What resistances R_0, R_1, and R_2 should you use? (Note: real DACs are not made this way.)

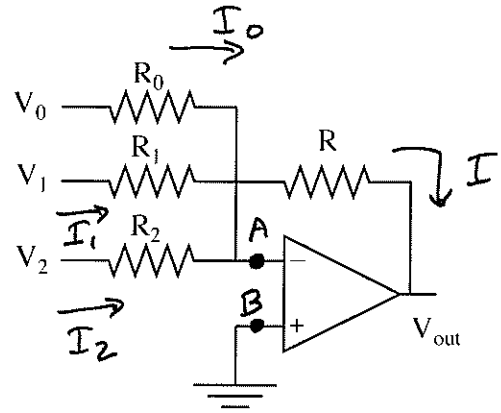

Negative feedback, so $V_A = V_B = 0$.

No current flows in or out of op-amp inputs, so

$I_0 + I_1 + I_2 = I$.

$I_0 = V_0/R_0$ $\qquad V_{out} = \cancel{V_A}^{\,0} - R\left(\frac{V_0}{R_0} + \frac{V_1}{R_1} + \frac{V_2}{R_2}\right)$

$I_1 = V_1/R_1$

$I_2 = V_2/R_2$ $\qquad$ So choose $R_0 = R$, $R_1 = \frac{R}{2}$, $R_2 = \frac{R}{4}$

12. In the circuit below, give V_{out} as a function of V_1, V_2, R_1, R_2, R_3, and C (or some subset of these).

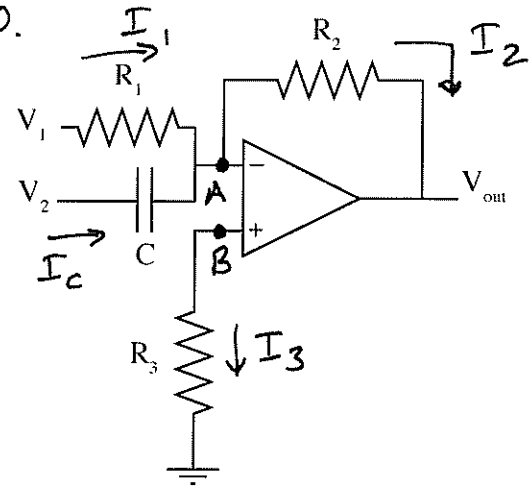

No current in or out of inputs, so $V_B = \cancel{I_3 R_3}^{\,0} = 0$.

Negative feedback, so $V_A = V_B = 0$.

No current into − terminal, so $I_2 = I_1 + I_c$.

$V_{out} = V_A - I_2 R_2 = -(I_1 + I_c) R_2$

$I_1 = V_1/R_1$

$I_c = C\frac{dV_2}{dt}$

13. In the circuit at right, give V_{out}.

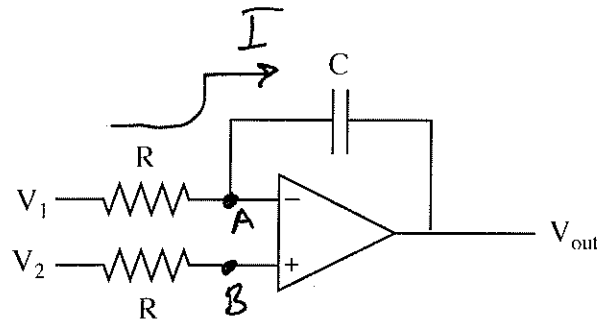

Negative feedback, so $V_A = V_B$.

No current into + input, so $V_B = V_2$.

$I = \frac{V_1 - V_A}{R} = \frac{V_1 - V_2}{R}$

$V_{out} = V_A - V_C = V_B - V_C = V_2 - V_C$

$V_C = \frac{1}{C}\int I\,dt = \frac{1}{C}\int\left(\frac{V_1 - V_2}{R}\right)dt$